PVC Fence Installation Guide

How to set out, dig and build every Dagood PVC fence style, and hang a swing gate.

2400 mm	300 mm	600–700 mm	50 mm
post centres	hole diameter	hole depth	gap under the bottom rail

Before you start

- Check for underground pipes and cables, and call your local utilities before you dig.
- Check your council's rules, and get a building permit if you need one.
- Look along the line for rocks, roots and concrete from an old fence.
- On a slope, a slab, a retaining wall or a windy site, or fitting an arbour? Read “Slopes, slabs, walls and wind” before you set out: the parts and the set-out can be different.
- These panels aren't for pool fencing or balustrades.

You need

- Stakes, string line and a tape measure
- A post-hole digger or auger
- Concrete
- A spirit level
- For a short panel or a slab: a saw, a drill and driver, and small flange-head stainless screws
- Clear silicone for the caps

In this guide

1 Set out the line 2
2 Dig the holes 3
3 Set the posts 3
4 Build the panels 4
5 Hang the gate 6
6 Fit the caps 6
Slopes, slabs, walls and wind 7
Fitting an arbour 9
Looking after your fence 9

1 Set out the line

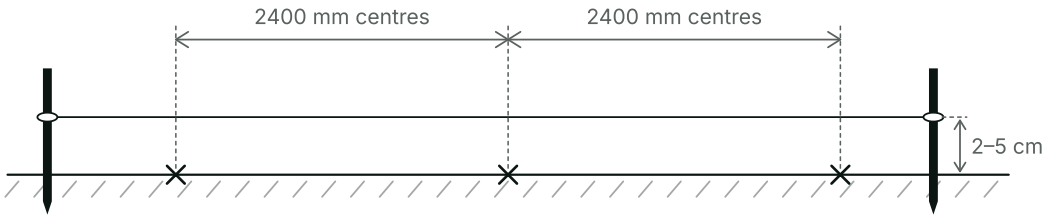

Put a stake at each end and run a tight string line 2–5 cm off the ground. Measure along it and mark each post at 2400 mm, centre to centre, on flat ground.

Note which post goes where:

- End post: where a run starts or stops, and beside a gate when the fence carries on past it
- Line post: between two panels in a straight line
- Corner post: at a 90° turn (it takes a little either way)
- Blank post: no panel on it, such as the gate post at the end of a run

The two posts either side of a gate are the gate posts. For a single gate, the gap between them is the gate width plus 40 mm (20 mm for the hinge, 20 mm for the latch), inside face to inside face. A 1000 mm gate needs 1040 mm. For a pair, it's both gate widths plus 20 mm at each hinge and 20 mm between the gates. The ground under a swing gate has to be level.

Panels come in full lengths. If a run doesn't end on a full panel, mark its last post where the run ends: you'll cut that panel to fit before you build it (step 4).

2 Dig the holes

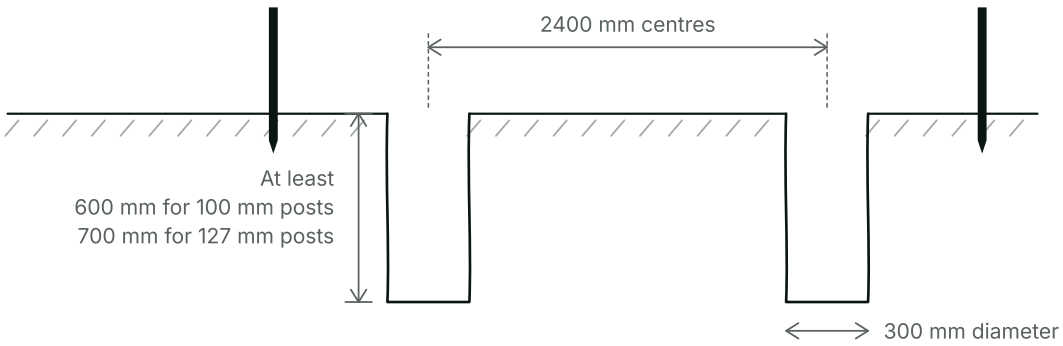

Take the string off and leave the stakes in. Dig each hole 300 mm in diameter:

- At least 600 mm deep for 100 × 100 mm posts: Penelope, Emma, Eliza, Bella and Marge
- At least 700 mm deep for 127 × 127 mm posts: Vicci, Large Vicci, Maria, Little Maria, Elle and Lora

The slots in the posts are at fixed heights, so how deep a post sits sets the height of its rails. Leave a 50 mm gap under the bottom rail: dig the holes so each post can sit with the bottom of its lowest slot 50 mm above the ground. On flat ground, that's the same depth for every hole. On a concrete slab, skip steps 2 and 3: see “On a concrete slab”.

3 Set the posts

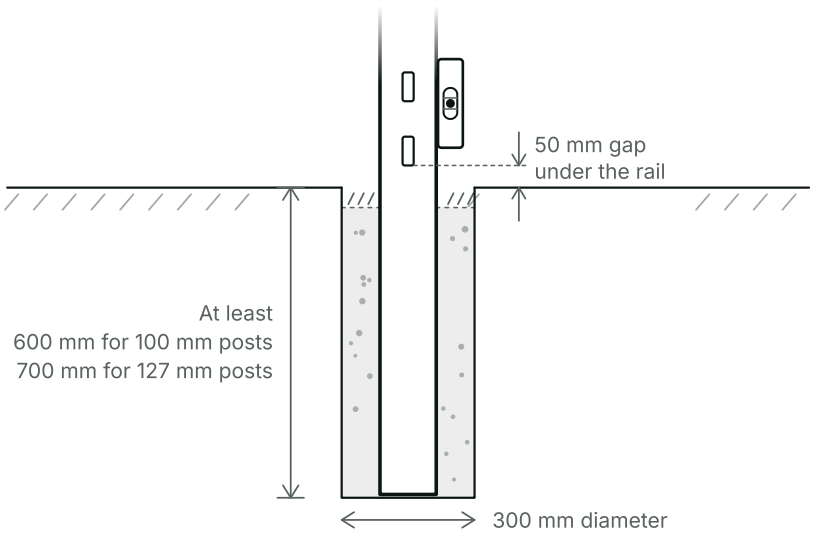

Run a string line along the side of the posts to keep the fence straight. Turn each post so its slots face the panels.

Gate posts: slide the aluminium insert into the post before it goes in the hole, so the insert is concreted in with it. The hinge post always has one. If the insert is a little longer than the post, let the extra sit below it, in the concrete.

Stand the post in its hole. Fill the hole three-quarters full with concrete, working it in around the post, then top up to just below ground level, leaving room for a few centimetres of soil. While the concrete is wet, check the post is plumb, the bottom of its lowest slot is 50 mm above the ground, and its slots line up in height with the post before.

Set every post the same way, then let the concrete set for the time on the bag before you fit any panels.

4 Build the panels

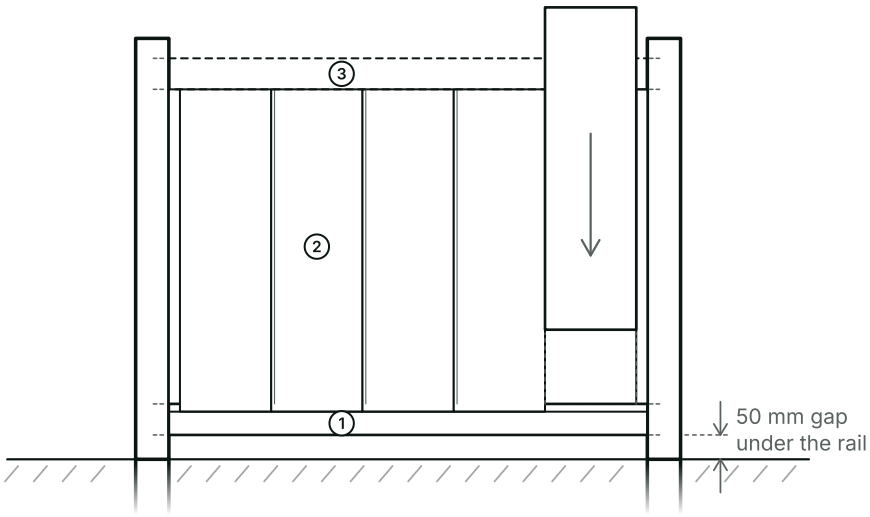

Building on a windy site? Tape the bottom rail first (see “In a windy spot”).

Short panel at the end of a run? Cut it before you build it. A panel can be shortened to any length; its height is fixed by the slots in the posts. Cut the rails from one end only, so the other end keeps its notches: they help stop the rail pulling out of the post. If you're unsure where to cut, talk to us.

Build every panel from the bottom rail up. Each rail goes into one post first, then slides into the next. Find your style below.

Vicci and Large Vicci

1. Fit the bottom rail between the posts, with the U-channels fitted to the sides of the posts.
2. Slide the infills down into the U-channels and the bottom rail, tongue into groove, so they sit flush.
3. Fit the top rail to lock the infills in.

Maria, Little Maria and Elle

1. Fit the bottom rail between the posts, with the U-channels fitted to the sides of the posts.
2. Slide the infills down into the U-channels and the bottom rail, tongue into groove, so they sit flush.
3. Fit the middle rail to lock the infills in.
4. Stand the pickets in the cut-outs on top of the middle rail.
5. Fit the top rail, lining each picket up with the cut-outs underneath it. On Elle, the pickets come up through the top rail.

Marge

1. Fit the bottom rail between the posts.
2. Stand the pickets in the cut-outs on top of the bottom rail.
3. Fit the top rail, lining each picket up with the cut-outs underneath it.

Bella

1. Fit the bottom rail between the posts.
2. Stand the pickets in the cut-outs on top of the bottom rail.
3. Fit the middle rail, lining each picket up with the cut-outs underneath it.
4. Stand the two top pickets in the cut-outs on top of the middle rail.
5. Fit the top rail over them.

Emma and Eliza

1. Fit the bottom rail, then the top rail, between the posts.
2. Slide the pickets down through the top rail into the bottom rail. Eliza's pickets come in different heights: match each one to its cut-out.

Lora and Penelope

1. Fit the bottom rail, then the middle rail, between the posts.
2. Slide the pickets down through the middle rail into the bottom rail.
3. Fit the top rail, lining each picket up with the cut-outs underneath it.

Shortened rails: once they're in, put a small flange-head stainless screw through the inside of the post into each end of every shortened rail.

5 Hang the gate

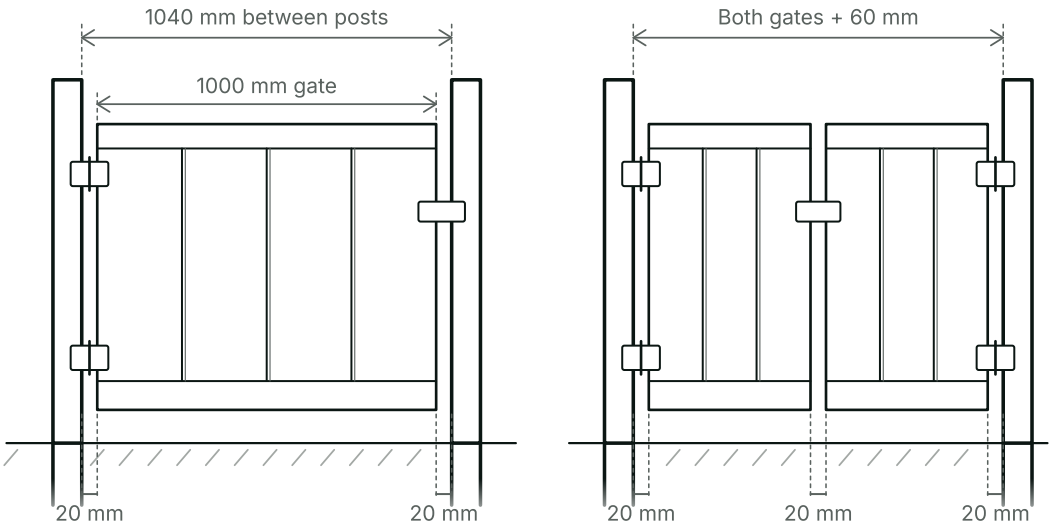

Hang the gate on the hinge post, then adjust the hinges to close the gap to the post, so the gate swings freely and latches properly. Fit the hinges and latch following their own instructions.

Don't cut a gate yourself. If yours needs to be narrower, we cut it to width when you order, down to 800 mm (a cutting charge applies).

6 Fit the caps

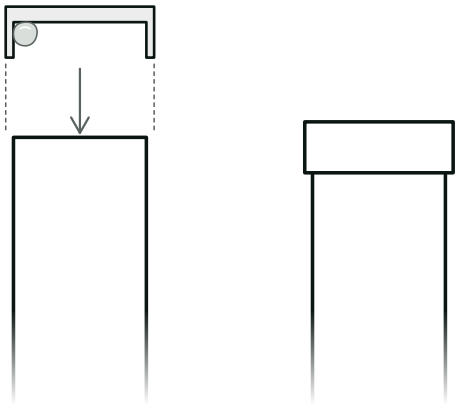

Hold each cap on with a small dab of clear silicone inside one corner, not glue, so you can change the style later.

Slopes, slabs, walls and wind

Tell us about any of these when you order, so we can check the parts.

On a slope

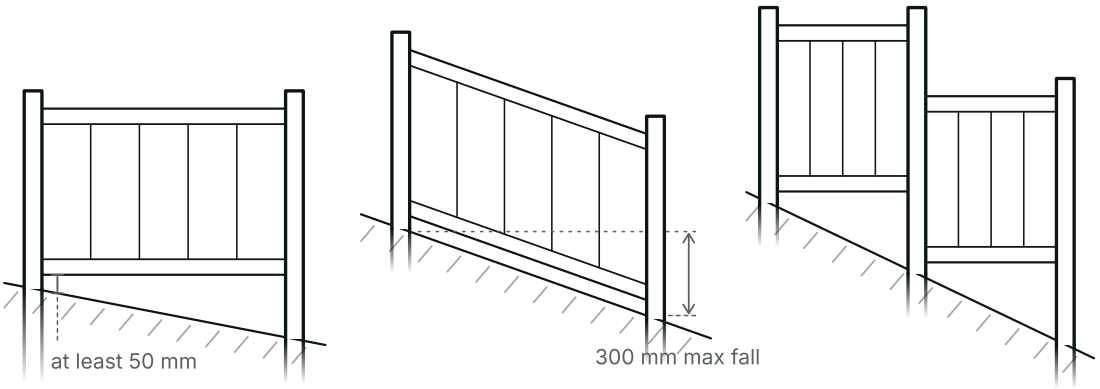

- A gentle slope: dig deeper on the high side so the top rails stay level, never shallower than step 2. The slope shows at the bottom of the panel: keep at least 50 mm under the rail at its lowest point.
- Up to 300 mm of fall over a full 2400 mm panel: rake the fence. Bella and Little Maria aren't raked: step them. Set the posts a little closer than 2400 mm. Then lengthen each slot in the posts a little at a time: upward to angle a rail up, downward to angle it down. Do the same for the pickets where your style has them. Use a jigsaw or hand saw on Lora and Penelope (their rails are already cut wider underneath to let the pickets rake), and a rotary cutting tool on the other styles.
- Steeper than that: step the fence. We supply end or blank posts and bracket kits instead, and taller posts where the drop is big, so every post still gets its full depth in the ground.

On a concrete slab

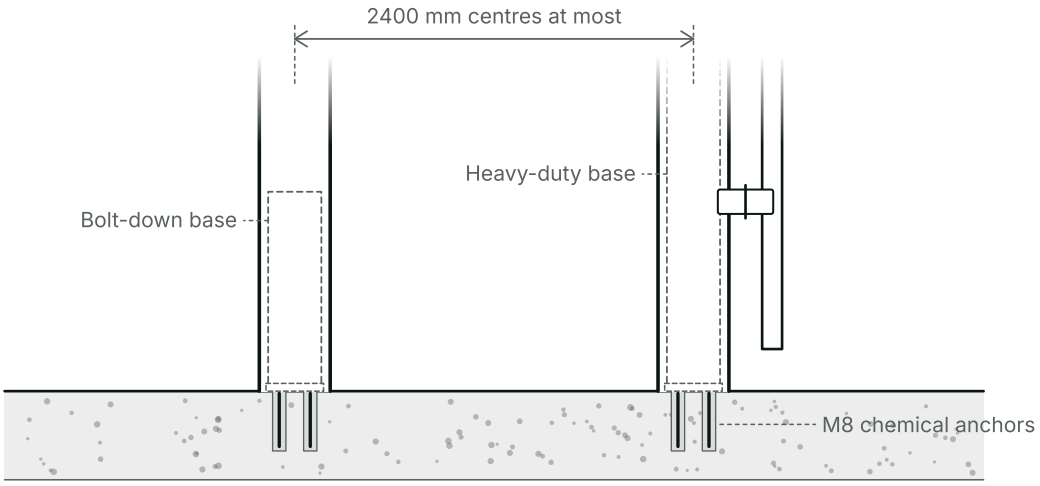

- Each post sits on a bolt-down base, at most 2400 mm apart, centre to centre. Use the base made for that post: line and corner posts each have their own.
- A gate's hinge post takes the longer heavy-duty base, in place of the aluminium insert, for strength.
- Run a string line along the bottom edge of the bases, place them, mark the holes, then take the bases off and drill.
- Fix the bases with M8 chemical anchors, following the anchor's own instructions, and let it set. Expansion bolts can loosen over time; if you use them, use M10.
- On a sloping slab, put window shims under the base so the post stands upright.
- The heavy-duty gate base isn't made for high wind. On an exposed slab, talk to us before you order.

In a windy spot

Before the panels go in, tape over the end of the bottom rail so concrete can't run into it. Once the panels are in, fill each post halfway up with concrete. We also have H-shaped reinforcing inserts for exposed sites: ask us.

Against a house wall

A run that finishes at a wall ends on a wall bracket set made for your style, instead of a post.

On a retaining wall

Talk to us before you order.

Sliding gates

Use an experienced sliding-gate installer.

Fitting an arbour

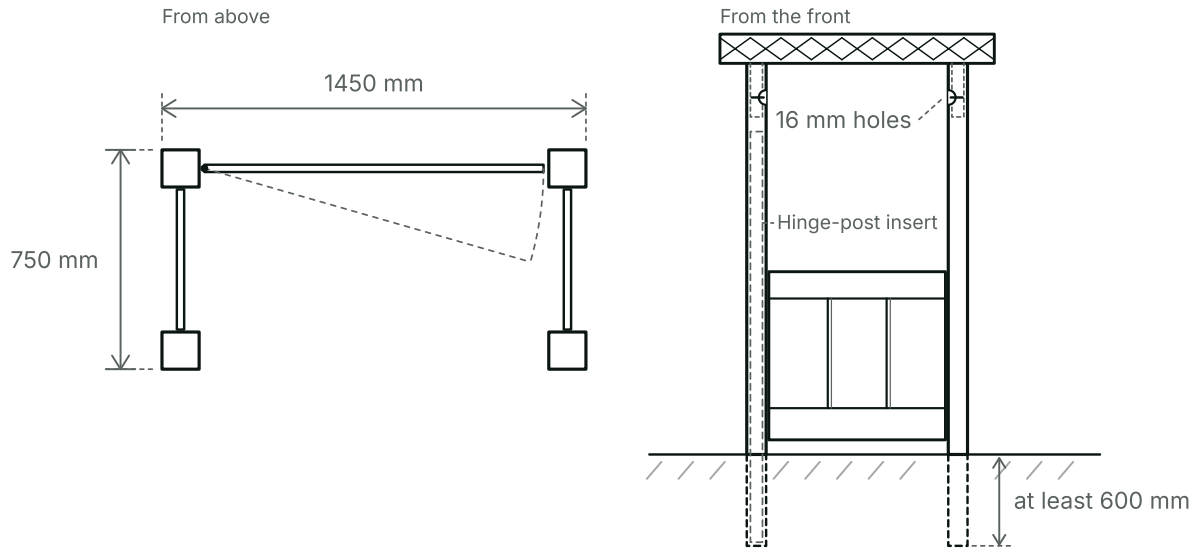

An arbour stands over a walkway gate.

- It takes a 1200 mm gate on 100 × 100 mm posts, or a 1160 mm gate on 127 × 127 mm posts.
- Set out a 1450 × 750 mm rectangle, measured across the outside edges of the four posts, with the gate in one of the 1450 mm sides. Each post goes at least 600 mm into the ground.
- Slide the aluminium insert into the arbour post the gate hinges on before you concrete it.
- To fix the top: drill a 16 mm hole in the inside face of each post, screw through into the aluminium insert in the bottom edge of the lattice top, and close each hole with one of the plugs supplied.

Looking after your fence

Gumption, from the hardware or grocery store, cleans the fence and lifts stains. Try any cleaner on a hidden spot first, as some can stain, and rinse the fence well with water afterwards.

Help

Stuck? Chat with us or email hello@dagood.com.au.

Text v3.3 · November 2026